DonoBrace®

INSTALLATION GUIDE

TENSION-ONLY ROD BRACING WITH GREATER EFFICIENCY AND FAST INSTALLATION

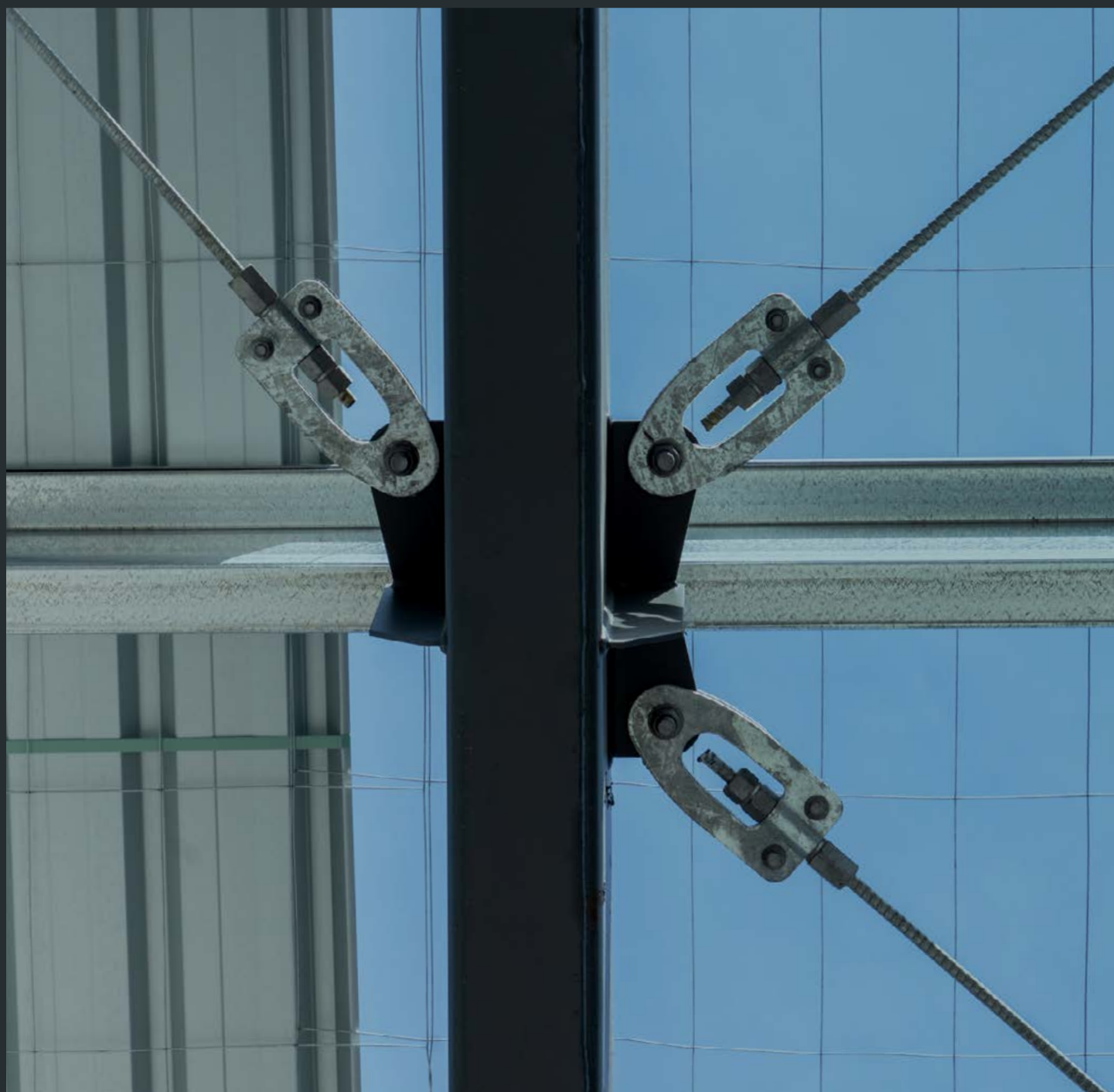

Contents

Products	18	Specify: Bolt C/C length	24
Nut and bolt sizes	19	Steps 1-2	25
Accessories	20	Steps 3-5	26
DB15 Checklist	21	Steps 6-7	27
DB20 Checklist	22	Steps 8-9	28
DB25 Checklist	23	Steps 10-11	29

VIEW THE INSTALLATION VIDEO: https://youtu.be/2jFFSL3CKXU

At DonoBrace we pride ourselves on our superior performance and comprehensive testing. To ensure the correct calculated capacities are achieved, it is imperative that DonoBrace is used as a completed supplied system. No material substitutions are to be made without specific written authority.

Products

DB 15

Code	Description	Weights
DB15	M15 x 9Mtr DonoBar 830Mpa micro alloyed HDG ba	13.25kg
DB15ECSET + DB15ECKIT	Includes M15 DonoBrace end connection plates HDG, plus M15 DonoBrace fastener kit	5.50kg
DB15CSET	M15 DonoBrace coupler set (required only if brace is over 9m)	1.05kg

DB 20

Code	Description	Weights
DB20	M20 x 9Mtr DonoBar 830Mpa micro alloyed HDG bar	**23.95kg**
DB20ECSET + DB20ECKIT	Includes M20 DonoBrace end connection plates HDG, plus M20 DonoBrace fastener kit	13.82kg
DB20CSET	M20 DonoBrace coupler set (required only if brace is over 9m)	2.8kg

DB 25

Code	Description	Weights
DB25	M25 x 9Mtr DonoBar 830Mpa micro alloyed HDG bar	34.65kg
DB25ECSET + DB25ECKIT	Includes M25 DonoBrace end connection plates HDG, plus M25 DonoBrace fastener kit	19.85kg
DB25CSET	M25 DonoBrace coupler set (required only if brace is over 9m)	3.5kg

Nut and bolt sizes

All nut and bolt sizes conform to industry sizes and are fully tested as part of the DonoBrace system.

Description DB 15	Thread Size	Bolt Head SIze	Nut Head SIze
Half nut	DB 15	N/A	32mm (33mm)
Full nut	DB 15	N/A	32mm (33mm)
Flanged serrated bracket bolts	M12	16mm	18mm
Cleat to bracket bolt and nut	M20	34mm	30mm

N.B.

- Flanged serrated bracket bolts are designed to be tightened from one side only, due to gripping the steel surface.
- For nut head sizes, the sizes in brackets above are recommended incase of galvanising build-up.

Description DB 20	Thread Size	Bolt Head SIze	Nut Head SIze
Half nut	DB 20	N/A	50mm (2 Inch)
Full nut	DB 20	N/A	50mm (2 Inch)
Flanged serrated bracket bolts	M12	16mm	18mm
Cleat to bracket bolt and nut	M24	41mm	36mm

N.B.

- Flanged serrated bracket bolts are designed to be tightened from one side only, due to gripping the steel surface.
- For nut head sizes, the sizes in brackets above are recommended incase of galvanising build-up.

Description DB 25	Thread Size	Bolt Head SIze	Nut Head SIze
Half nut	DB 25	N/A	50mm (33mm)
Full nut	DB 25	N/A	50mm (33mm)
Flanged serrted bracket bolts	M12	16mm	18mm
Cleat to bracket bolt and nut	M30	50mm	46mm

N.B.

- Flanged serrated bracket bolts are designed to be tightened from one side only, due to gripping the steel surface.
- For nut head sizes, bracketed sizes (33mm and 2 Inches) are recommended incase of galvanising build-up.

Accessories

Recommended tooling

Tool	Image
Notched combination spanner 33mm	Notch example - DB 15: 17.5mm
Notched combination spanner 2"	Notch example - DB 20: 22.5mm DB 25: 27.5mm
Stillson (pipe wrench) - Option 1	
Chain wrench - Option 2	
Adjustable wrench	
Ring spanner 16mm or 18mm (flanged serrated bracket bolts)	

N.B.

- Flanged serrated bracket bolts are designed to be tightened from one side only, due to gripping the steel surface. Socket and ratchet (or gun) can be used to snug.
- The intention of the installation (Stillson wrench, chain wrench), is to have the bar wind into the nut for tensioning. The tooling is down to personal preference, as explained later in this document.

Checklist for installation:

DB15

PARTS: Check you have all assembly parts as pictured.

TECHNICAL INFORMATION: Size, length, surface finish.

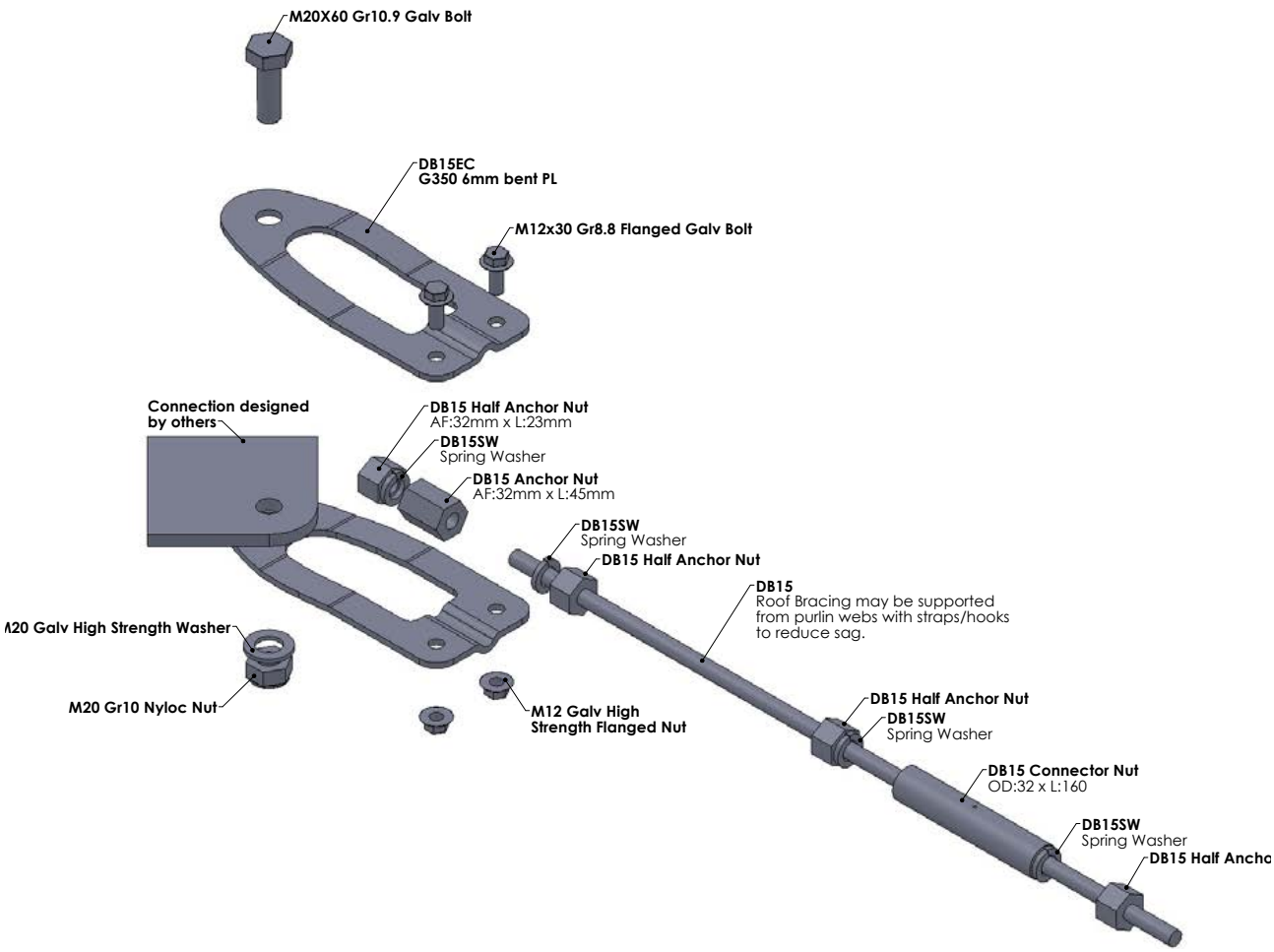

N.B: Coupler only required for brace lengths over 9m.

Checklist for installation:

DB20

PARTS: Check you have all assembly parts as pictured.

TECHNICAL INFORMATION: Size, length, surface finish.

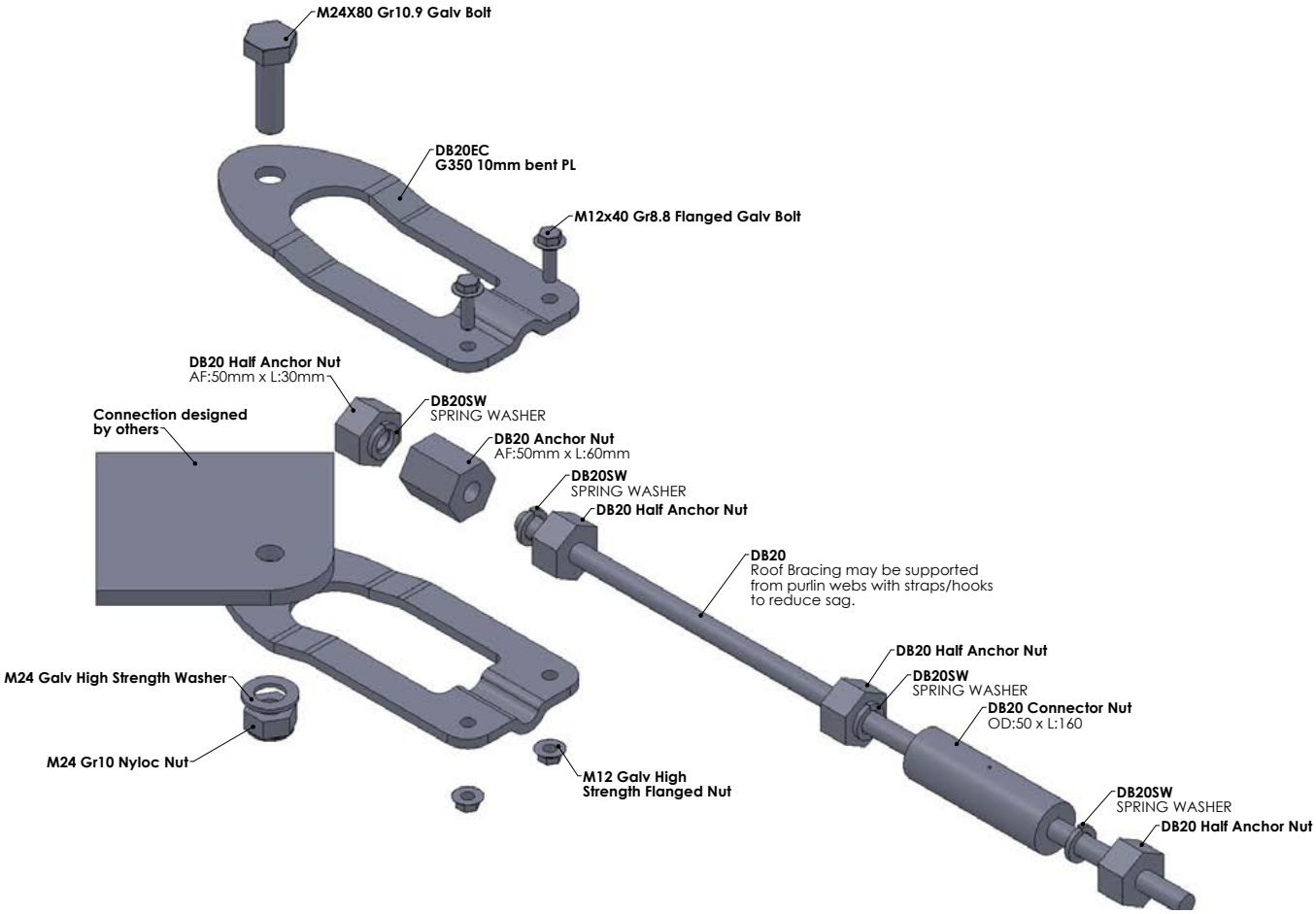

N.B: Coupler only required for brace lengths over 9m.

Checklist for installation:

DB25

PARTS: Check you have all assembly parts as pictured.

TECHNICAL INFORMATION: Size, length, surface finish.

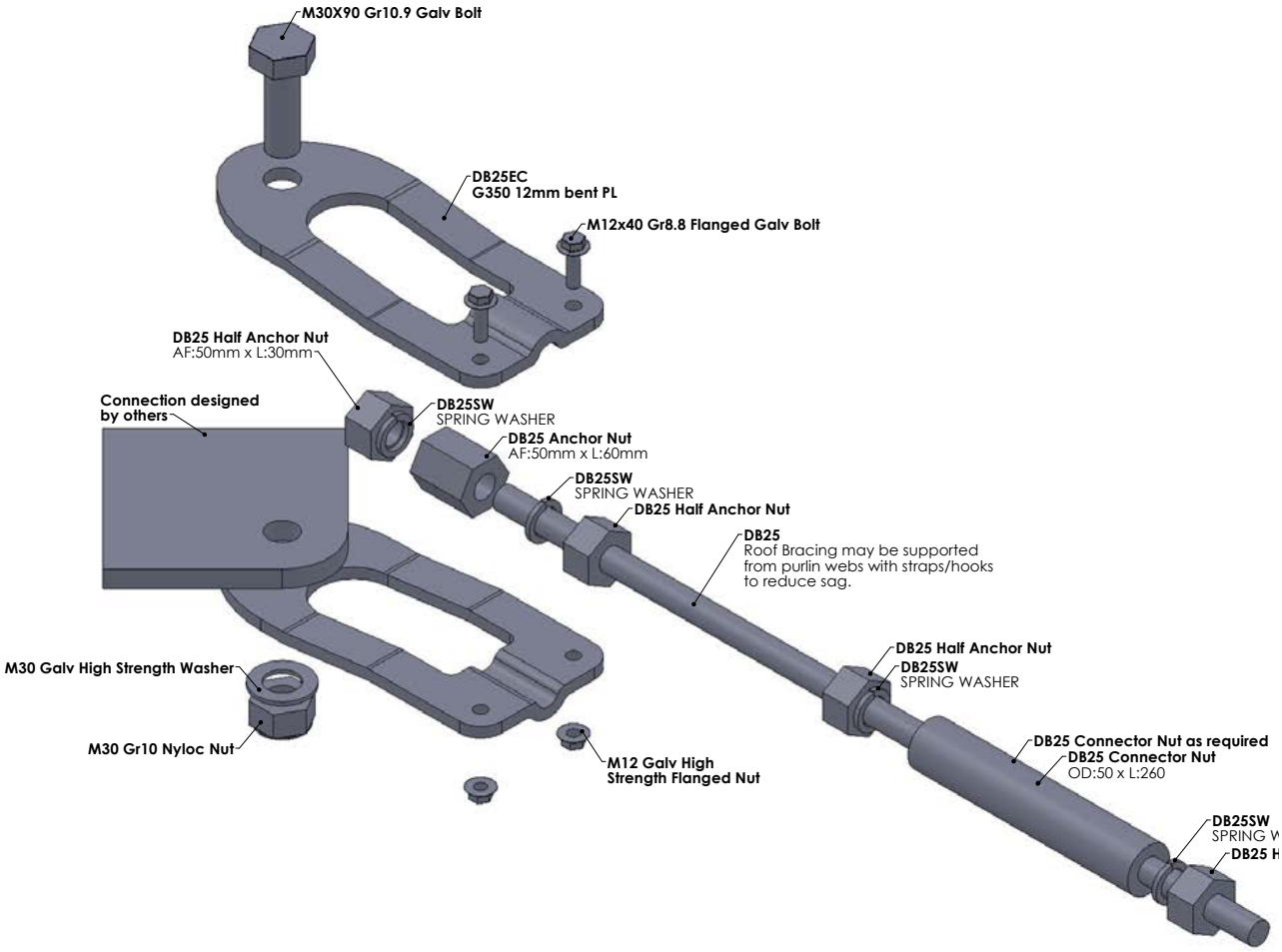

N.B: Coupler only required for brace lengths over 9m.

Specify bolt C/C length

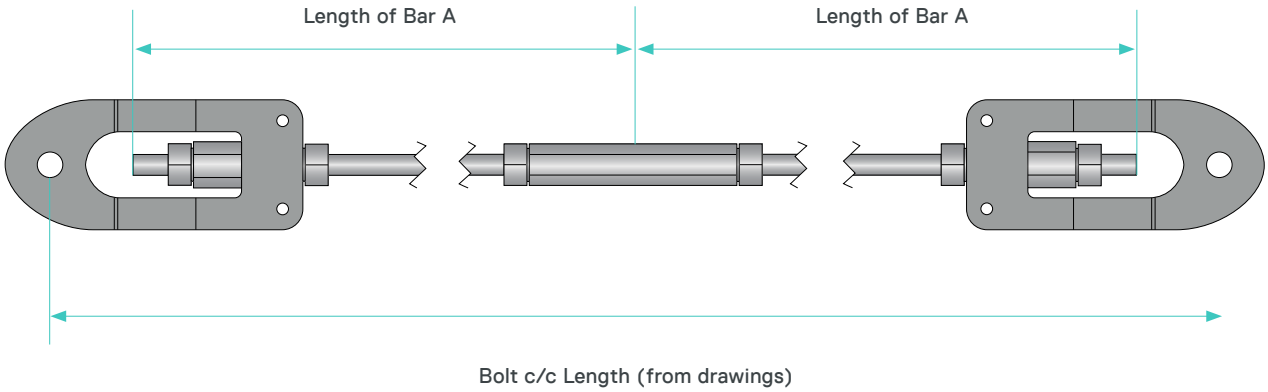

Use table below to calculate cut lengths of bar:

	Bolt c/c Length (write in box below)	Subtract	Total length of bar required	Length of Bar A	Length of Bar B (suggest 1000)
DB15		**190 (95e/e)**			
DB20		**240 (120e/e)**			
DB25		**200 (100e/e)**			
Example DB20	**9500**	**240 (120e/e)**	**9260 (9500-240=9260)**	**8260**	**1000**

e/e = Each end

N.B: Coupler only required for brace lengths over 9m.

Minimum length of bar 1000mm.

STEP 1

- Measure Bar A and cut to length
  (minimum length of bar - 1m)
- Check ends are rounded off, to avoid threading issues.
- Repeat for Bar B length. Note: this example works with 2 lengths of bar and a coupler.

  N.B. If the brace length is less than 9m, no coupler is required.

eg. for DB20

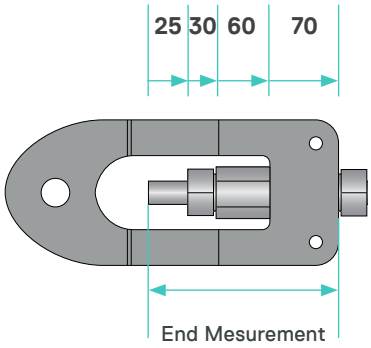

STEP 2

- Wind locking nut and spring washer onto bar.
- Wind coupler on to bar until it hits the centre stop pin.
- Check inspection holes with a pin to confirm correct installation.
- Tighten to snug.
- Repeat for other side of the coupler..

  N.B: Coupler only required for brace lengths over 9m.

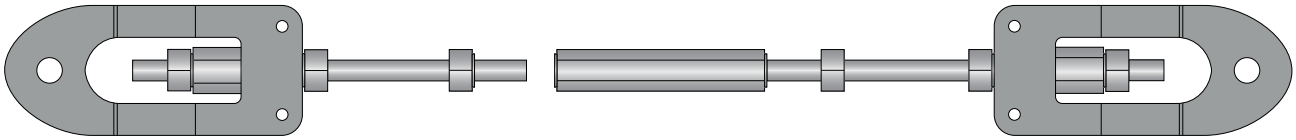

Repeat for other side of the coupler.

Additional Slack for easy installation if required

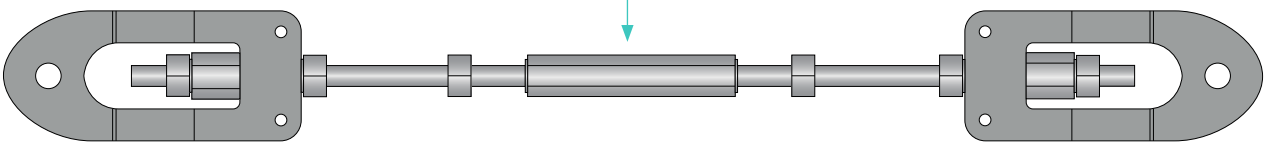

N.B. All slack to be removed from coupler to engage with central pin prior to tensioning.

Install coupler loosely so it is only wound on three full turns. This will create slack in the bar to assist with installation.

STEP 3

- Wind locking nut onto bar with spring washer. This will be tightened later.
- End 1: Wind full nut, spring washer, and locking nut onto bar, ensuring the correct left tail length and tighten full nut and half nut 'snug' together.
- Fix 2 x flanged serrated bracket bolts to the plate (these can be snugged up as long as the bar spins in the bracket - if not, do not snug up at this point).
- Note minimum tail lengths in table (right).
- Note tail marked in red on diagram (right).

Minimum tail lengths	
DB15	22mm
DB20	25mm
DB25	28mm

Fasten 2 x flanged lock bolts finger tight to allow bar to move

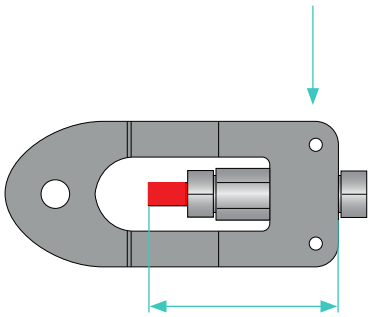

STEP 4

- End 2 - Wind locking nut and spring washer onto bar end. This will be tightened later.
- Wind full nut, spring washer, and lock nuts. Leave full nut and half lock nut loose at the end of the bar, not snugged to the full nut.
- Assemble ends on level surface (try doing it on the ground).
- Fix 2 x flanged serrated bracket bolts to the plate (these can be snugged up as long as the bar spins in the bracket - if not, do not snug up at this point).

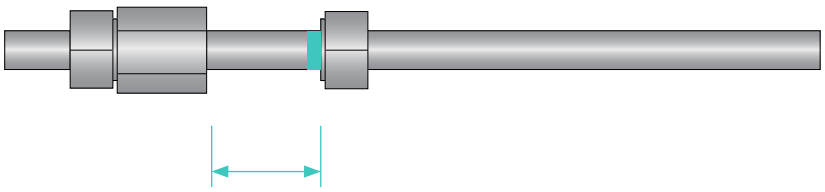

Plate space

STEP 5

Lift DonoBrace system into position and fasten bolt & nyloc nut to structural cleat. We suggest you start with the highest end of the brace.

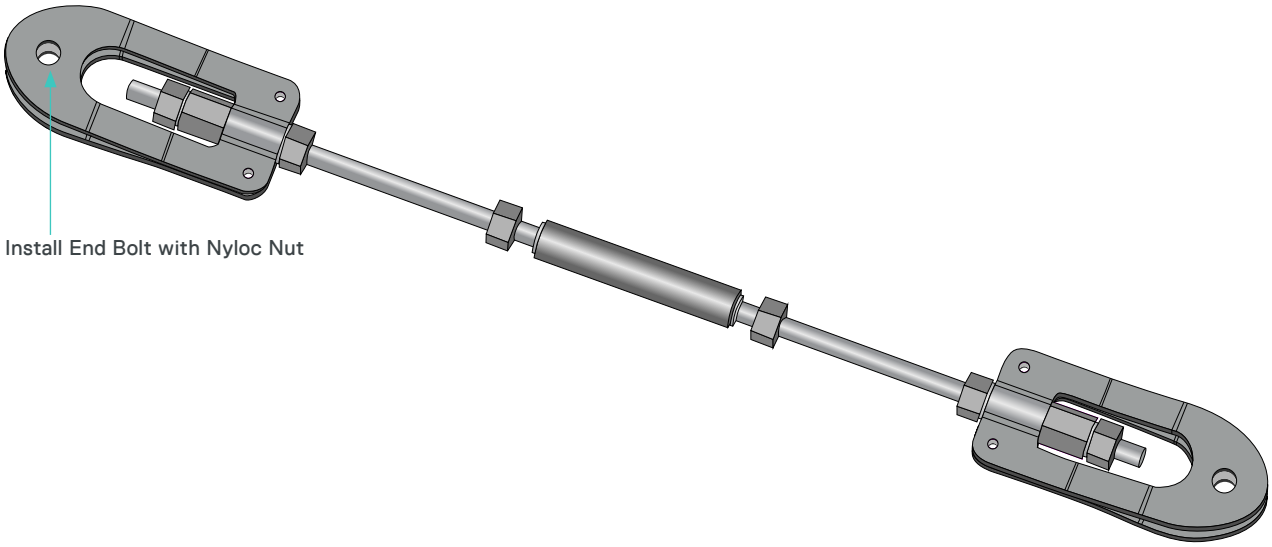

STEP 6

Lift second end of DonoBrace to structural cleat. Install bolt and nyloc nut. Fasten.

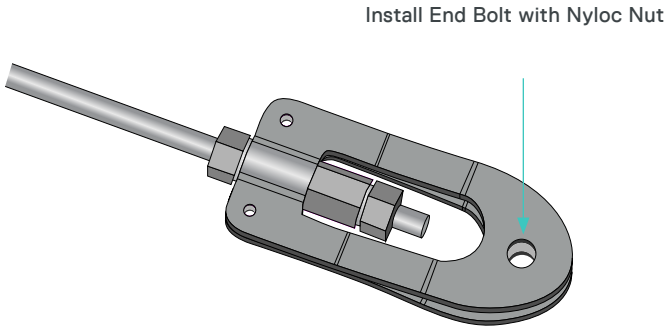

Option: If slack provided through coupler

Tighten reinforcing bar into coupler until the bar stops at the central pin. This indicates full engagement. Ensure both ends are fully engaged. Ensure the locknut in each end of the coupler is snugged tight.

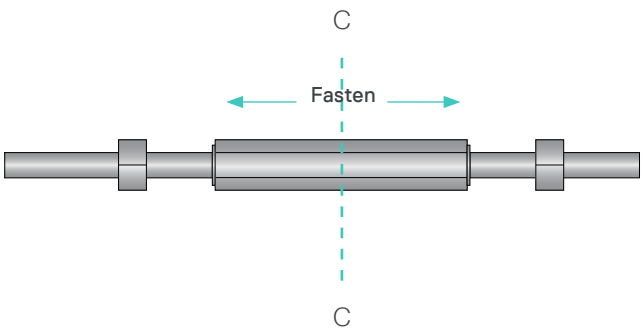

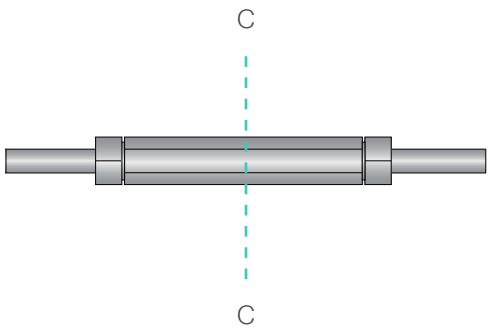

STEP 7

- Place notched spanner over the full nut at the loose end (End 2). If working alone, leave the spanner hanging.
- **A.** If using a coupler, attach your Stillson/chain wrench to the furthest nut on the coupler.

  N.B. This is to ensure that the coupler stays snugged up.

  B. If no coupler is required, your Stillson/chain wrench may be attached to any part of the bar.
- Rotate the bar via your Stillson/chain wrench to wind the bar into the full nut (with the spanner attached), until slack is removed.

STEP 8

Snug the system on each end of the DonoBrace.

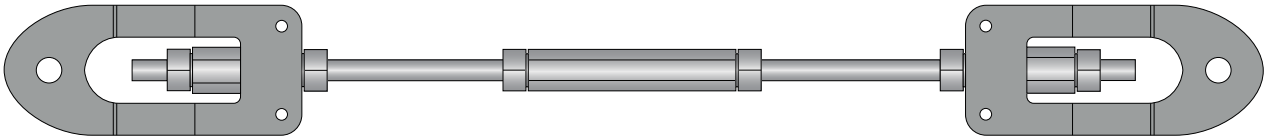

STEP 9

BEFORE FINISHING:

Check all assembly parts are installed as per the picture above.

Check all locknuts are tightened.

Check all bolts are fully tightened.

Visually check the DonoBrace is tight (it should look straight, not bowed).

Revision Number: AU03
Uploaded: 14.12.21

Customer Relationship Team:
PH: +61 02 9098 7622
E: au.enquiries@donovangroup.com

donovangroup.com/donobrace-system/

Another construction technology
breakthrough from:

DONOVANGROUP